EA SERIES ACTUATORS

NOW AVAILABLE WITH MORE MODELS TO ARRIVE SOON

Instrucon EA electric rotary actuators are primarily used for the automated, precise positioning of valves, dampers, and louvers in commercial heating, ventilation, and air conditioning (HVAC) systems as well as heavy-duty industrial process control applications.

They provide proportional, floating, or two-position control to manage liquid, gas, and airflow. These actuators are widely utilized across several key areas:

Industrial Processes & Thermal Applications
Because specific models (like the EA70 series) offer high torque outputs up to 1,300 in-lbs and can feature oil-immersed gear trains to survive harsh environments, they are standard "workhorses" in thermal industries:

- ***Industrial Furnaces & Ovens:***
  Controlling combustion air dampers and fuel-to-air ratio valves to safely regulate burner heat.
- ***Heat Treat Systems:***
  Regulating high-temperature environments for metal, glass, and materials manufacturing.
- ***Heat Recovery Systems:***
  Diverting or balancing exhaust and recuperated air streams.

Commercial HVAC & Fluid Management
Medium and high-torque EA series models (such as the EA50 and EA70 series) are mounted directly onto hardware to automate building comfort and ventilation:

- Air Handling Units (AHUs) & Economizers: Regulating outdoor air intake, exhaust, and recirculation louvers.
- Boilers & Chiller Systems: Controlling water or oil cooling systems, hot water supply valves, and steam lines.
- Large Valve Assembly Control: Actuating heavy-duty globe valves, blast gates, and rotary shaft valve bodies (such as the Barber-Colman VB-7000 and VB-9000 series).

Mechanical Equipment Mechanics
Depending on the application requirements, these actuators are used to automate physical adjustments on mechanical components like:

- Vortex Controls & Hydraulic Couplings
- Environmental Chambers & Large Refrigeration Systems (e.g., managing hot gas bypass valves)

© 2026 INSTRUCON, INC. | All Rights Reserved.

instrucon

EA SERIES ACTUATORS BY INSTRUCON

EA12

TWO POSITON SPRING RETURN

SPECIFICATIONS

Supply Voltage:	120Vac 60Hz
4-20mA Input:	None
Auxiliary Switch:	None
Position Signal:	None
Stroke:	170°
Spring Return:	Counter Clockwise (CCW)
Timing:	20 seconds
Torque:	60 lb-in
Ratings:	NEMA Type 1, UL, cUL
Dimensions:	5-3/4" high x 5-3/8" wide x 6-9/16" deep (146mm x 136mm x 167mm)
Environment:	*Ambient temperature limits:* -40 to 136°F (-40 to 58°C)
Humidity:	5 to 95% R.H., non-condensing

APPLICATIONS / EA12

The Model EA12 actuator is a spring return gear driven crankshaft actuator for two position operation of dampers, values or other equipment that requires return to normal position upon power interruption.

The hardened steel crankshaft is driven through a train of precision hobbed gears. The actuator is driven by a shaded pole motor that is completely submerged in oil and sealed in an aluminum case to assure long life and minimum maintenance.

The gear train of the EA12 crank actuator is also sealed in oil. Working in conjunction with primary loop controllers, these power units are ideal for ON-OFF control of valves and dampers.

The EA12 travel time is 20 seconds and its travel limit is 170° clockwise. The spring return is counterclockwise to the original position when de-energized.

The Model EA12 is UL/cUL listed. EA12 is compatible with the VB-7000 and VB-9000 valves.

InstruCon Model Number	Previous Barber Colman Number
EA12	EA12-00000
	EA12-00000-000-0-00

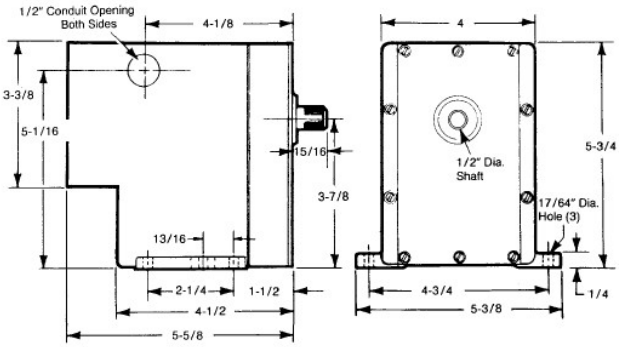

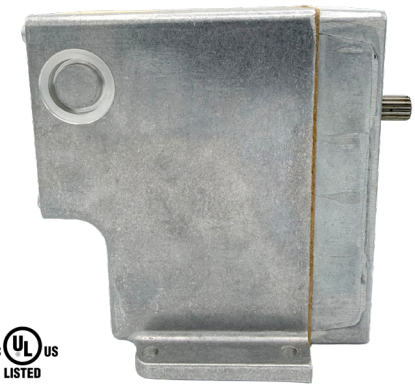

© Copyright 2026 InstruCon, Inc. | 3415 Precision Drive, Rockford IL 61109

EA23

STANDARD SERIES LOW TORQUE

SPECIFICATIONS

Supply Voltage:	120Vac 60Hz
4-20mA Input:	Optional
Auxiliary Switch:	SPDT
Position Signal:	Slidewire 100 Ohm Standard
Stroke:	90°
Spring Return:	None
Timing:	12 seconds
Torque:	50 lb-in
Ratings:	NEMA Type 1, UL, cUL
Dimensions:	7" high x 5-3/8" wide x 6-5/16" deep (178 mm x 136mm x 160mm)
Environment:	*Ambient temperature limits:* -40 to 136°F (-40 to 58°C)
Humidity:	5 to 95% R.H., non-condensing

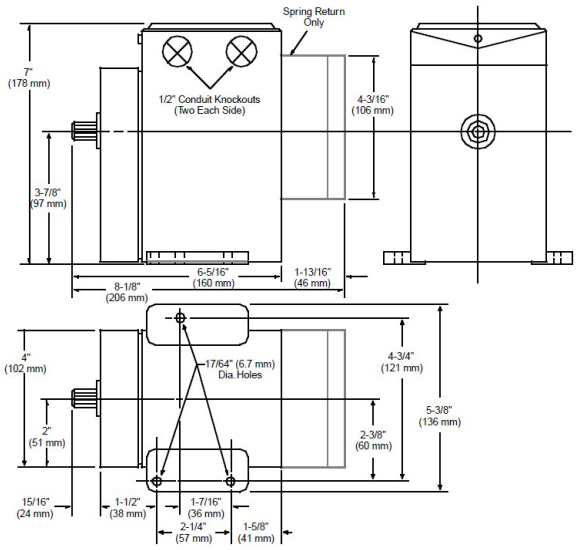

APPLICATIONS / EA23

In conjunction with primary loop controllers, these low torque non-spring return actuators proportionally position fuel valves, butterfly valves, dampers or other similar devices.

The output shaft moves in both directions and can stop at any point in the stroke. Four models are available featuring a standard 100 Ω internal feedback slidewire and a selection of travel times and rotation limits. Not available with end limit switches, some models have auxiliary switches and a variety of optional features.

The Model EA23 is UL/cUL listed. EA23 is compatible with the VB-7000 and VB-9000 valves.

InstruCon Model Number	Previous Barber Colman Number
EA23	EA23-00000
	EA23-00000-000-0-00

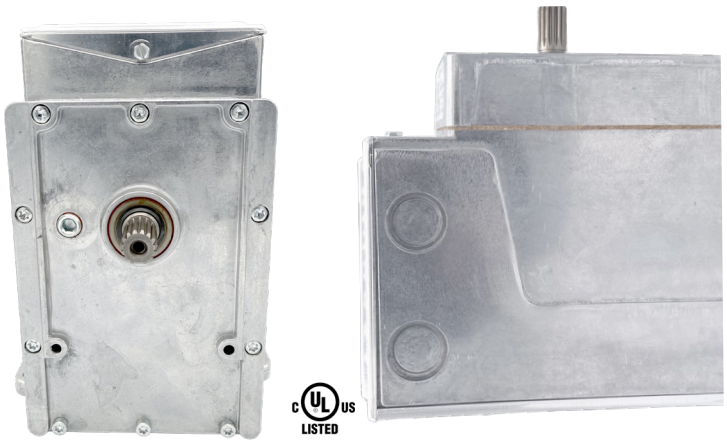

© Copyright 2026 InstruCon, Inc. | 3415 Precision Drive, Rockford IL 61109

instrucon

EA SERIES ACTUATORS BY INSTRUCON

EA41-370

STANDARD SERIES MEDIUM TORQUE

SPECIFICATIONS

Supply Voltage:	120Vac 60Hz
4-20mA Input:	Optional
Auxiliary Switch:	SPDT
Position Signal:	Slidewire 100 Ohm Standard
Stroke:	90°
Spring Return:	Clockwise
Timing:	45 seconds
Torque:	50 lb-in
Ratings:	NEMA Type 4, UL, cUL
Dimensions:	7" high x 8-1/8" wide x 6-5/16" deep (178 mm x 206mm x 160mm)
Environment:	*Ambient temperature limits:* -40 to 136°F (-40 to 58°C)
Humidity:	5 to 95% R.H., non-condensing

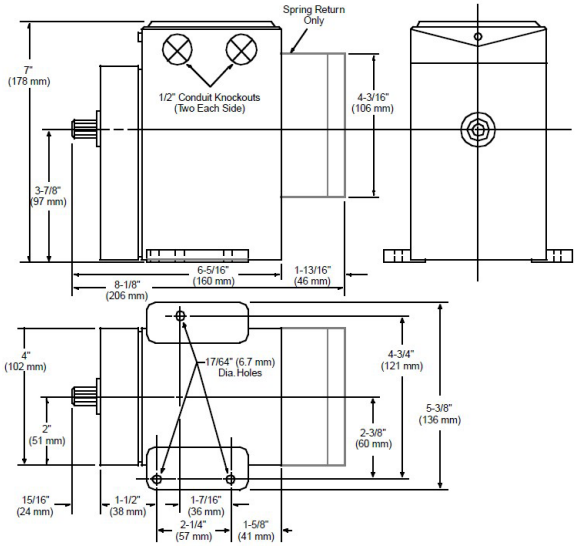

APPLICATIONS / EA41-370

EThe medium torque actuators are ideal for proportional positioning of a fuel valve, butterfly valve, damper and similar applications.

The enclosed spring drives the actuator to the closed position on power interruption. The direction of the spring return is fixed to clockwise and cannot be field changed. All EA41-370 are NEMA 4 rated.

Standard features include a 100 Ohm feedback slidewire and a single SPDT switch. The EA41-370 is UL/cUL listed. The EA41-370 is compatible with the VB-7000 and VB-9000 valves.

InstruCon Model Number	Previous Barber Colman Number
EA41-370	EA41-00370
	EA41-00370-000-0-00

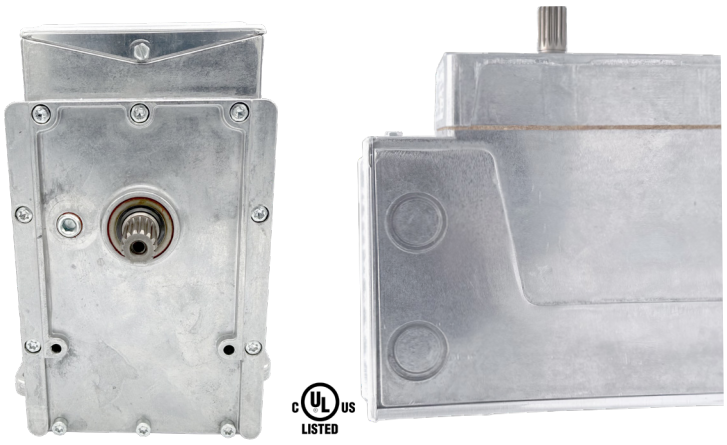

© Copyright 2026 InstruCon, Inc. | 3415 Precision Drive, Rockford IL 61109

instrucon

EA SERIES ACTUATORS BY INSTRUCON

EA50

STANDARD SERIES MEDIUM TORQUE

SPECIFICATIONS

c UL us LISTED

Model:	EA51	EA55	EA57	EA57-370
Supply Voltage:	120Vac 60Hz			
4-20mA Input:	Optional			
Auxiliary Switch:	SPDT			
Position Signal:	Slidewire 100 Ohm Standard			
Stroke:	90°			
Spring Return:	None			
Timing (Seconds):	12 Adj.	40 Adj.	40 Seconds	
Torque:	60 lb-in	220 lb-in		
Ratings:	NEMA 1			NEMA 4
	UL / cUL			
Dimensions:	7" high x 5-3/8" wide x 6-5/16" deep (178 mm x 136mm x 160mm)			
Environment:	*Ambient temperature limits:* -40 to 136°F (-40 to 58°C)			
Humidity:	5 to 95% R.H., non-condensing			

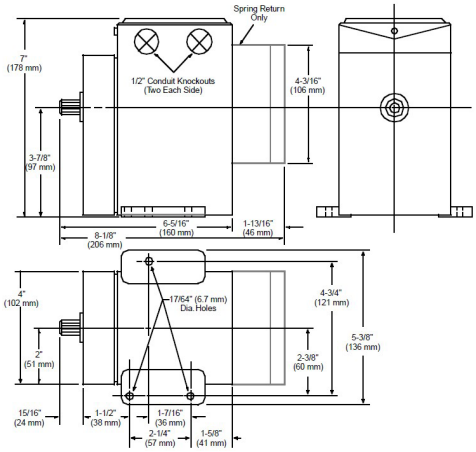

APPLICATIONS / EA51 / EA55 / EA57 / EA57-370

The medium torque actuators are ideal for proportional positioning of a fuel valve, butterfly valve, damper and similar applications.

Units are available with either fixed or adjustable speed. Timing of adjustable speed units can be increased (decreasing the speed) by turning a slotted adjustment screw on the outside of the case. Adjust range is approximately ten times rated.

Standard features include a 100 Ohm feedback slidewire and a single SPDT switch. EA51, EA55, EA57 and EA57-370 are UL/cUL listed. The EA50 Series are compatible with the VB-7000 and VB-9000 valves.

InstruCon Model Number	Previous Barber Colman Number
EA51	EA51-00000, EA51-00000-000-0-00
EA55	EA55-00000, EA55-00000-000-0-00
EA57	EA57-00000, EA57-00000-000-0-00
EA57-370	EA57-00370, EA57-00370-000-0-00

c UL us LISTED

© Copyright 2026 InstruCon, Inc. | 3415 Precision Drive, Rockford IL 61109

instrucon

EA SERIES ACTUATORS BY INSTRUCON

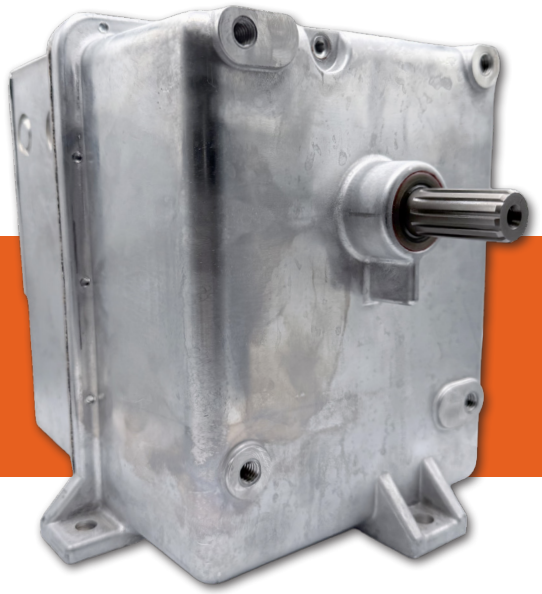

EA71

STANDARD SERIES HIGH TORQUE

SPECIFICATIONS

Model:	EA71	EA71-370	EA71-370-0-0-11
Supply Voltage:	120Vac 60Hz		
4-20mA Input:	Optional		
Auxiliary Switch:	SPDT		
Position Signal:	Slidewire 100 Ohm Standard		
Stroke:	90°		
Spring Return:	None		
Timing (Seconds):	20 Seconds		
Torque:	550 lb-in		
Ratings:	NEMA 1	NEMA 4	
	UL / cUL		
Dimensions:	9-9/16" high x 9-1/2" wide x 10-1/2" deep (215 mm x 216mm x 241mm)		
Environment:	*Ambient temperature limits:* -40 to 136°F (-40 to 58°C)		
Humidity:	5 to 95% R.H., non-condensing		

APPLICATIONS / EA71 / EA71-370 / EA71-370-0-0-11

EA70 Series Valve Actuators are ideal for heavy dampers, globe valves, blast gates, air/gas valves.

These workhorses have the brute force to handle the big job such as a heavy damper, globe valve, blast gate or air/gas valve. It can be used for vortex control and hydraulic coupling and will drive a speed changing screw or slide gate re-quiring a torque proportional actuator.

A solenoid brake holds the actuator in position when no movement is required. These actuators stay in position when power is removed.

The EA70 Series are UL/cUL listed. The EA70 Series is compatible with the VB-7000 and VB-9000 valves.

InstruCon Model Number	Previous Barber Colman Number
EA71	EA71-00000, EA71-00000-000-0-00
EA71-370	EA71-00370, EA71-00370-000-0-00
EA71-370-0-0-11	EA71-00370-0-000-11

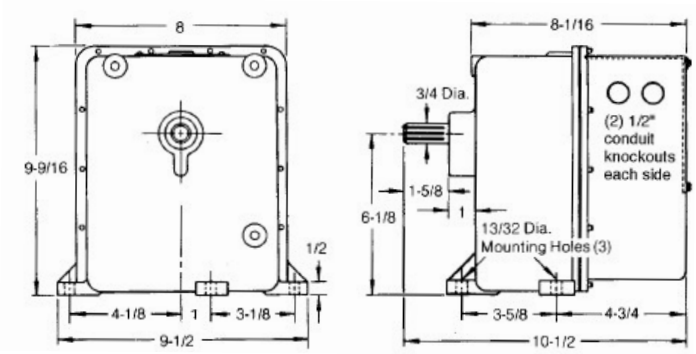

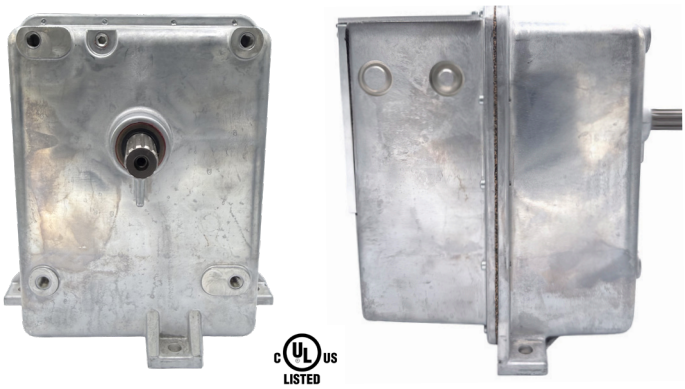

© Copyright 2026 InstruCon, Inc. | 3415 Precision Drive, Rockford IL 61109

instrucon

EA SERIES ACTUATORS BY INSTRUCON

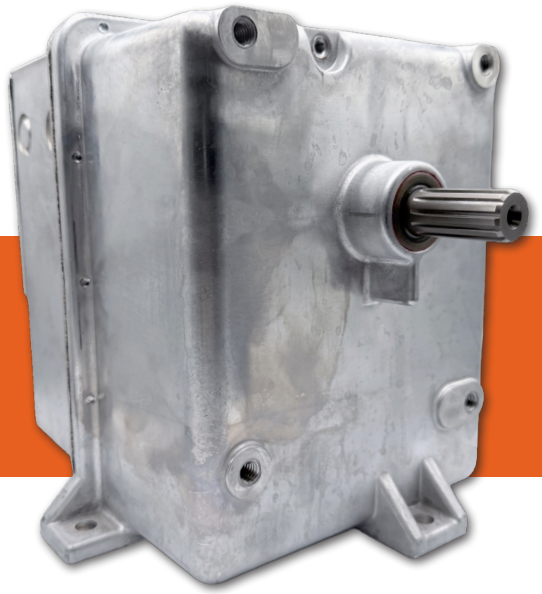

EA73

STANDARD SERIES HIGH TORQUE

SPECIFICATIONS

Model:	EA73	EA73-370
Supply Voltage:	120Vac 60Hz	
4-20mA Input:	None	
Auxiliary Switch:	SPDT	
Position Signal:	Slidewire 100 Ohm Standard	
Stroke:	90°	
Spring Return:	None	
Timing (Seconds):	33 Seconds	
Torque:	1100 lb-in	
Ratings:	NEMA 1	NEMA 4
	UL / cUL	
Dimensions:	7" high x 5-3/8" wide x 6-5/16" deep (178 mm x 136mm x 160mm)	
Environment:	*Ambient temperature limits:* -40 to 136°F (-40 to 58°C)	
Humidity:	5 to 95% R.H., non-condensing	

APPLICATIONS / EA73 / EA73-370

EA70 Series Valve Actuators are ideal for heavy dampers, globe valves, blast gates, air/gas valves.

These workhorses have the brute force to handle the big job such as a heavy damper, globe valve, blast gate or air/gas valve. It can be used for vortex control and hydraulic coupling and will drive a speed changing screw or slide gate re-quiring a torque proportional actuator.

A solenoid brake holds the actuator in position when no movement is required. These actuators stay in position when power is removed.

The EA70 Series are UL/cUL listed. The EA70 Series is compatible with the VB-7000 and VB-9000 valves.

InstruCon Model Number	Previous Barber Colman Number
EA73	EA73-00000, EA73-00000-000-0-00
EA73-370	EA73-00370, EA73-00370-000-0-00

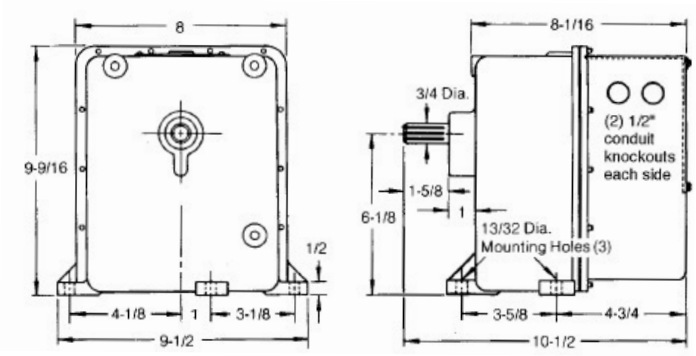

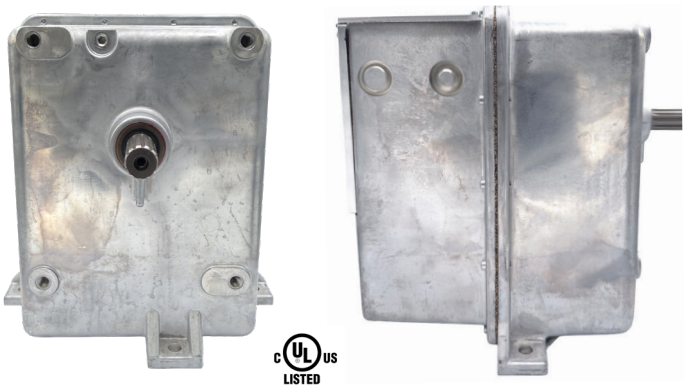

Copyright 2026 InstruCon, Inc. | 3415 Precision Drive, Rockford IL 61109

EA SERIES ACTUATORS

c UL us LISTED

instrucon

Available Models	Supply Voltage	4-20mA Input	Aux. Switches	Position Signal	Stroke	Spring Return	Timing Sec.	Torque	Ratings
EA12	120V ac 60Hz	None	None	None	170°	CCW	20	60 lb-in	NEMA 1, UL, CUL
EA23	120V ac 60Hz	Optional	SPDT	Slidewire 100 Ohm Standard.	90°	None	12	50 lb-in	NEMA 1, UL, CUL
EA41-370	120V ac 60Hz	Optional	SPDT	Slidewire 100 Ohm Standard.	90°	CW	45	50 lb-in	NEMA 4, UL, CUL
EA51	120V ac 60Hz	Optional	SPDT	Slidewire 100 Ohm Standard.	90°	None	12 adj.	60 lb-in	NEMA 1, UL, CUL
EA55	120V ac 60Hz	Optional	SPDT	Slidewire 100 Ohm Standard.	90°	None	40 adj.	220 lb-in	NEMA 1, UL, CUL
EA57	120V ac 60Hz	Optional	SPDT	Slidewire 100 Ohm Standard.	90°	None	40	220 lb-in	NEMA 1, UL, CUL
EA57-370	120V ac 60Hz	Optional	SPDT	Slidewire 100 Ohm Standard.	90°	None	40	220 lb-in	NEMA 4, UL, CUL
EA71	120V ac 60Hz	None	SPDT	Slidewire 100 Ohm Standard.	90°	None	20	550 lb-in	NEMA 1, UL, CUL
EA71-370	120V ac 60Hz	None	SPDT	Slidewire 100 Ohm Standard.	90°	None	20	550 lb-in	NEMA 4, UL, CUL
EA71-370-0-0-11	120V ac 60Hz	None	SPDT	Slidewire 100 Ohm Standard.	90°	None	20	550 lb-in	NEMA 4, UL, CUL
EA73	120V ac 60Hz	None	SPDT	Slidewire 100 Ohm Standard.	90°	None	33	1100 lb-in	NEMA 1, UL, CUL
EA73-370	120V ac 60Hz	None	SPDT	Slidewire 100 Ohm Standard.	90°	None	33	1100 lb-in	NEMA 4, UL, CUL

Manuals available by clicking the link below or entering in the url www.instrucon.com/actuators

© 2026 INSTRUCON, INC. | All Rights Reserved.

3415 Precision Drive • Rockford IL 61109
815.874.2000 • www.instrucon.com